2004 > G 2.0 DOHC > Body (Interior and Exterior)

COMPONENTS

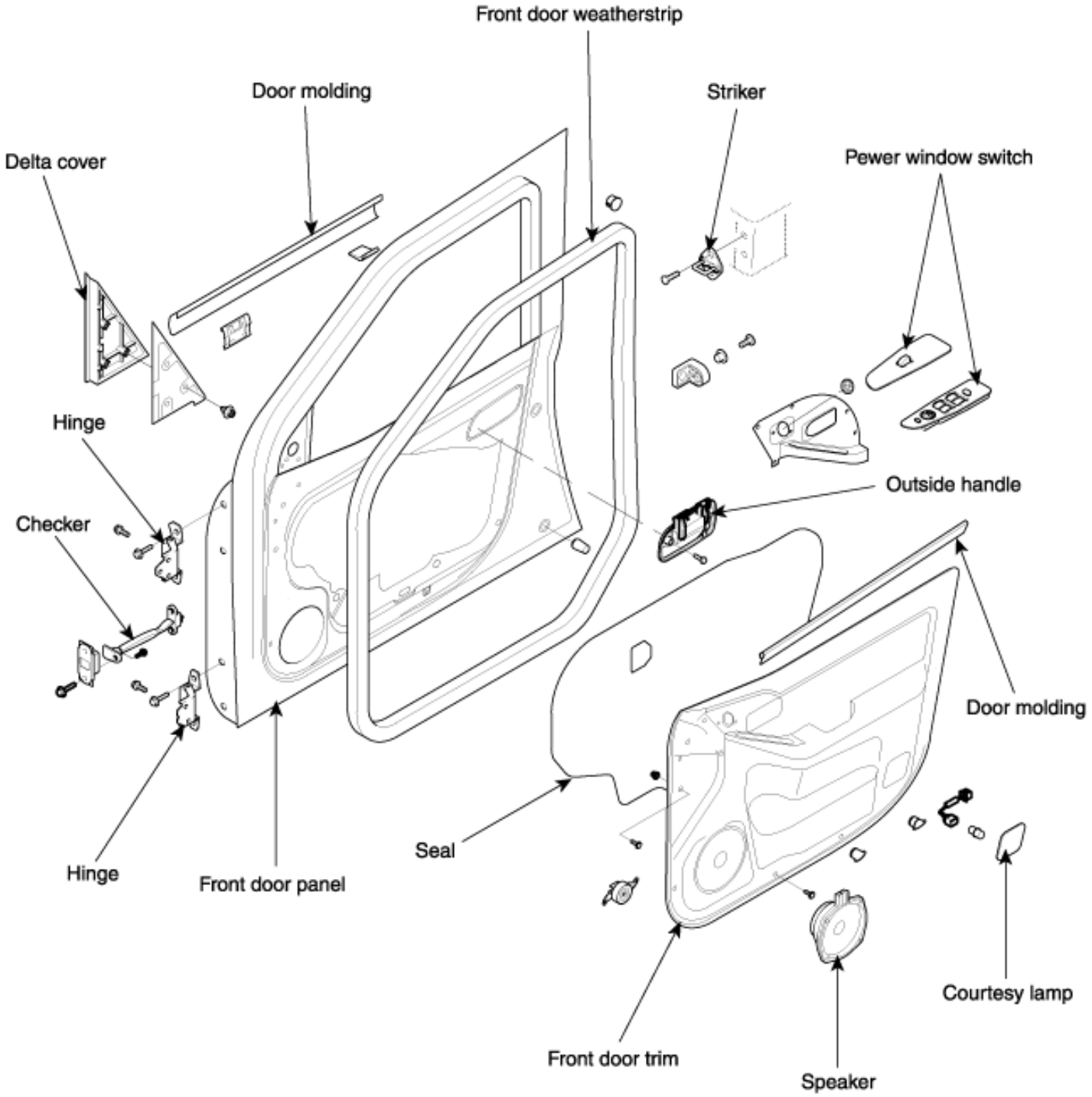

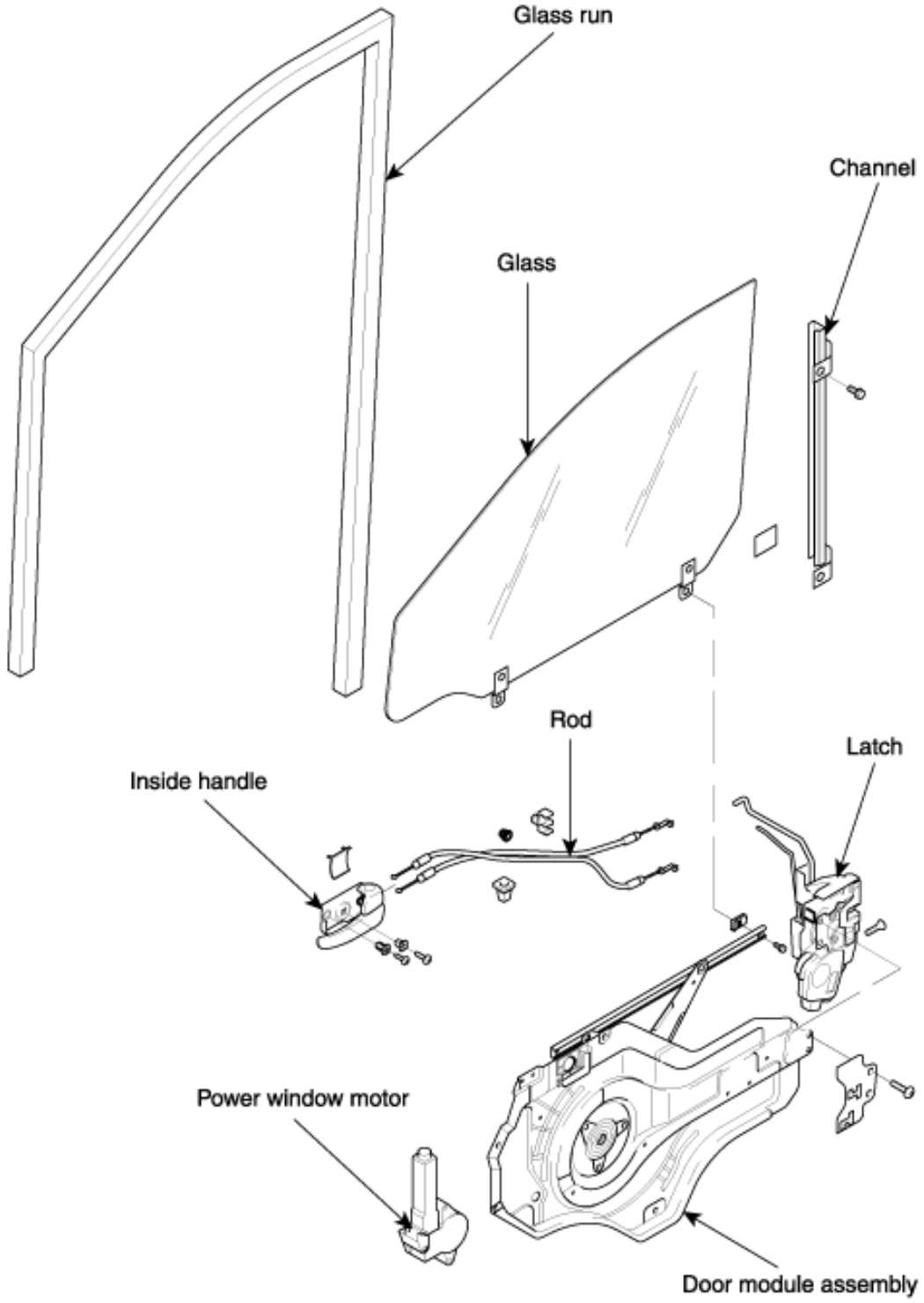
Glass run
Channel
Glass
Rod
Latch
Inside handle
Power window motor
Door module assembly