2004 > G 2.0 DOHC > Heating,Ventilation, Air Condioning

CIRCUIT DIAGRAM

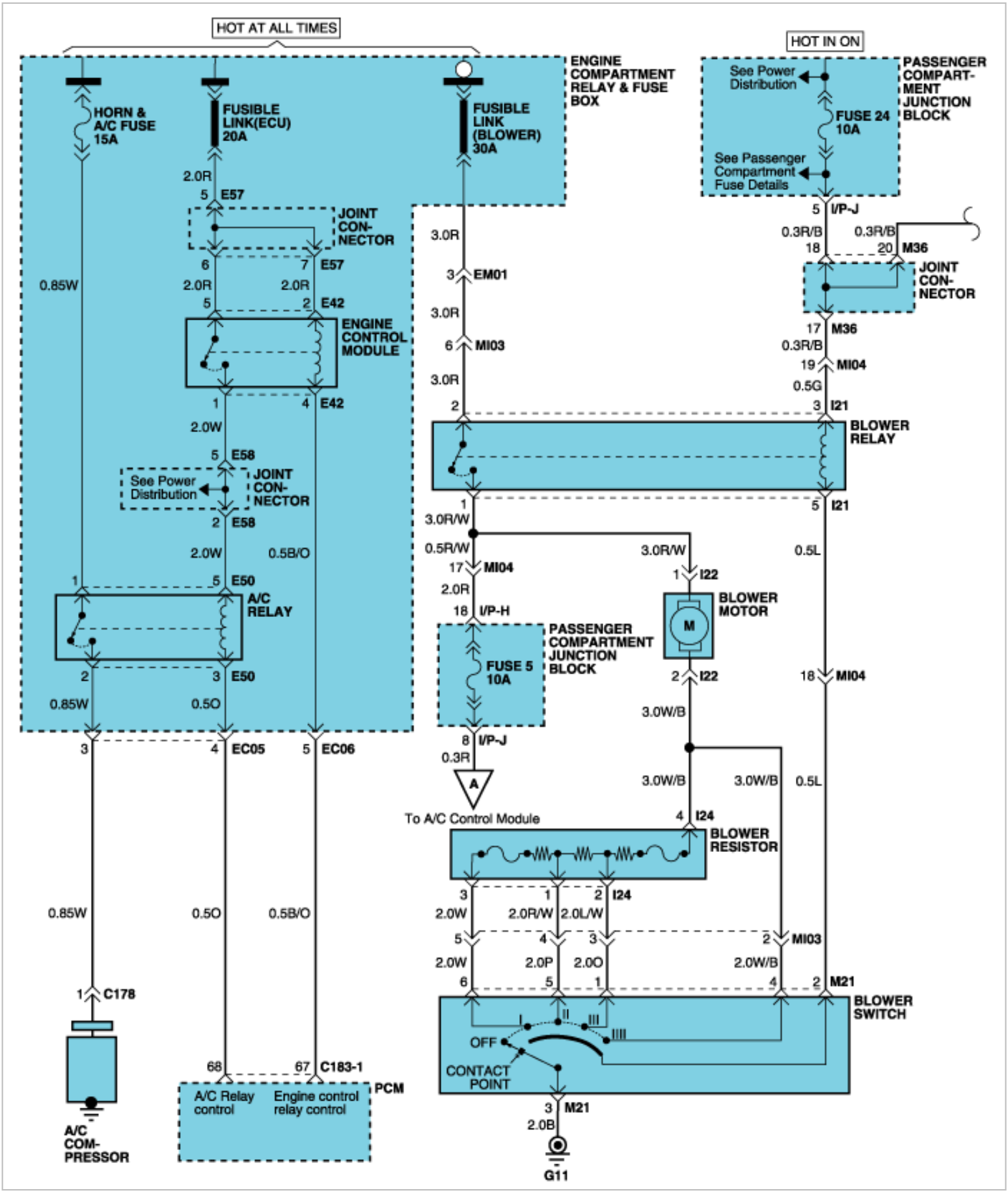

G11

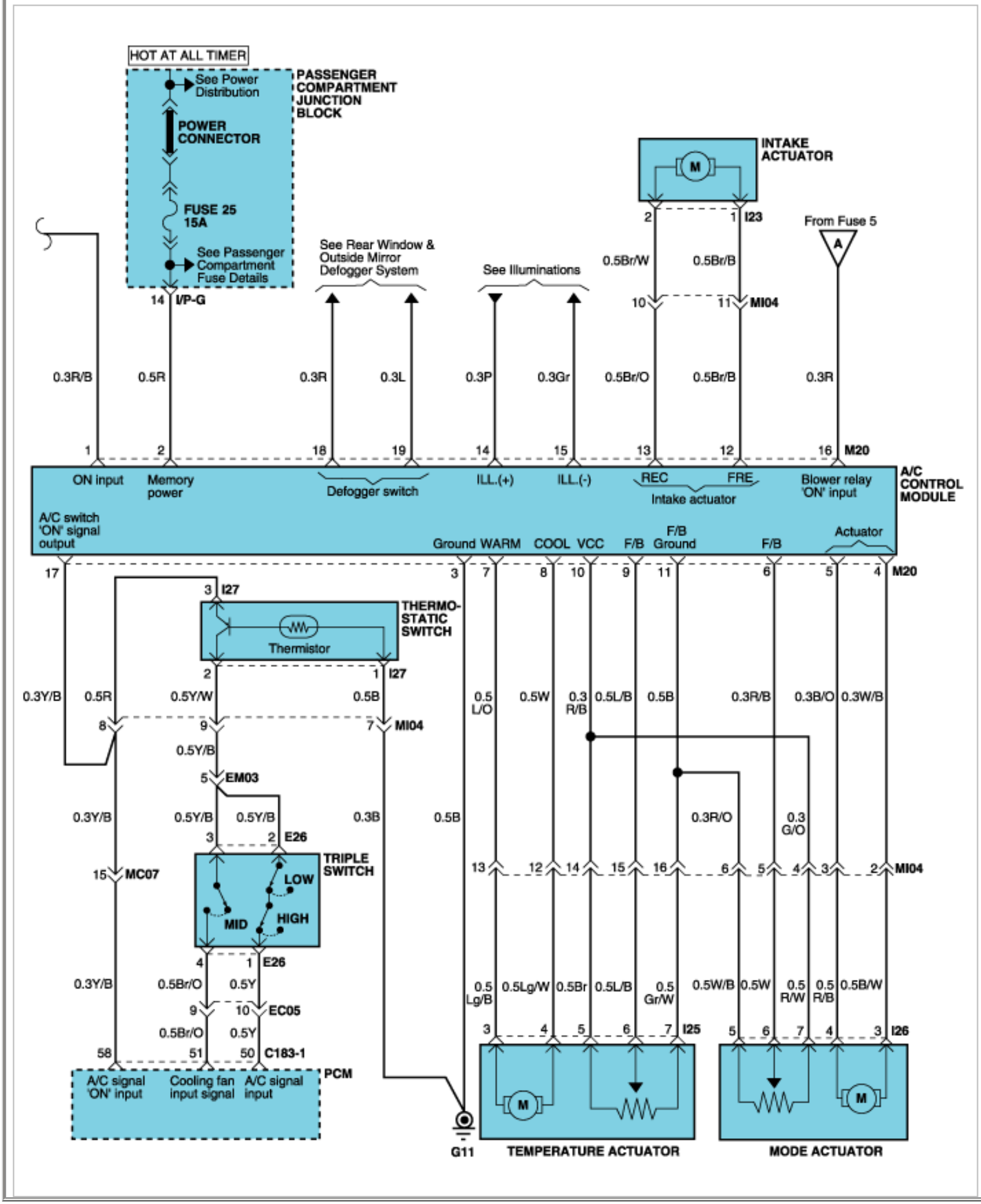
HOT AT ALL TIMER
See Power Distribution
POWER CONNECTOR
FUSE 25 15A
See Passenger Compartment Fuse Details
PASSENGER COMPARTMENT JUNCTION BLOCK
14 I/P-G
INTAKE ACTUATOR
M
2 1 I23
0.5Br/W 0.5Br/B
10 11 MI04
From Fuse 5
A
See Rear Window & Outside Mirror Defogger System
See Illuminations
0.3R/B 0.5R 0.3R 0.3L 0.3P 0.3Gr 0.5Br/O 0.5Br/B 0.3R
1 2 18 19 14 15 13 12 16 M20
ON input
Memory power
Defogger switch
ILL.(+)
ILL.(-)
REC FRE
Intake actuator
Blower relay 'ON' input
A/C CONTROL MODULE
A/C switch 'ON' signal output
Ground WARM COOL VCC F/B F/B Ground F/B Actuator
17 3 7 8 10 9 11 6 5 4 M20
3 I27
THERMO-STATIC SWITCH
Thermistor
2 1 I27
0.3Y/B 0.5R 0.5Y/W 0.5B 0.5 L/O 0.5W 0.3 R/B 0.5L/B 0.5B 0.3R/B 0.3B/O 0.3W/B
8 9 7 MI04
0.5Y/B
5 EM03
0.3Y/B 0.5Y/B 0.5Y/B 0.3B 0.5B 0.3R/O 0.3 G/O
3 2 E26
TRIPLE SWITCH
15 MC07
LOW
MID
HIGH
13 12 14 15 16 6 5 4 3 2 MI04
4 1 E26
0.3Y/B 0.5Br/O 0.5Y
9 10 EC05
0.5Br/O 0.5Y
58 51 50 C183-1
PCM
A/C signal 'ON' input
Cooling fan input signal
A/C signal input
0.5 Lg/B 0.5Lg/W 0.5Br 0.5L/B 0.5 Gr/W 0.5W/B 0.5W 0.5 R/W 0.5 R/B 0.5B/W
3 4 5 6 7 I25
5 6 7 4 3 I26
M
M
G11
TEMPERATURE ACTUATOR
MODE ACTUATOR